# Amama project

Q986

NATUZZI
ITALIA

# Harmony project
# Natuzzi Italia

The Harmony Project aims to offer a unified working method that ensures chromatic and stylistic harmony, preserving the brand's DNA.

This tool is intended to be more than just a product offering, aiming to harmonize an entire interior design project.

# Amama

Amama is a dining table that stands out for its essential and contemporary design, ideal for those looking for refined and multifunctional furniture. With a rigorous style and a versatile soul, Amama is perfect for any environment.

**Design by Andrea Steidl**

Andrea Steidl graduated in Industrial Design from the Polytechnic University of Milan in 2004, with a thesis on “Gratuity.” After moving to Milan, he joined Patricia Urquiola’s studio, where he took on the role of design manager. In 2016, he created his first personal project and later co-founded the studio \ar-o\ with Raquel Pacchini, focusing on product design, communication, strategic consulting, and art direction projects.

# Versatile Beauty

The Amama dining table stands out for its versatility. Suitable for any environment, it is available in various sizes and finishes. Customizable for small spaces or large rooms, it offers options between wood in essence or glossy lacquer, making it an ideal choice for those seeking refined and multifunctional furniture.

**Rectangular Version**

L 200 P 100 H74 cm
L 240 P100 H 74 cm
L 300 P100 H 74 cm

Glossy Lacquer Teal

Q986003XNA (L 200 cm)
Q986002XNA (L 240 cm)
Q986001XNA (L 300 cm)

Smoked Oak

Q986006XNA (L 200 cm)
Q986005XNA (L 240 cm)
Q986004XNA (L 300 cm)

# Technical Features

Amama is a dining table that stands out for its essential and contemporary design, ideal for those looking for refined and multifunctional furniture.
With a rigorous style and a versatile soul, Amama is perfect for any environment.

**Design Essentials**

The Amama table has an essential and rigorous design, suitable for those seeking refined and multifunctional furniture. It stands out for its essential design, distinctive presence, and contemporary character.

**Craft Quality**

The top is made of wood fiber (MDF) in oak essence or completely glossy lacquered (polyester glossy finish).

The leg is made of curved and shaped plywood with a pantograph. Each piece is created with precision using CNC machines, ensuring durability and a perfect finish.

**Versatility**

Available in various sizes and finishes, the Amama table offers customers the opportunity to choose the solution that best fits their space and style needs.

**Made in Italy**

The Amama table represents Italian design, offering a high-quality and stylish product.

# Sideboard
## Amama

The Amama sideboard combines a rounded and organic base with a container of rigorous shapes, creating a unique visual effect that attracts attention and enhances any environment.

**Sideboard**
L L220 P 55 H 74 cm

Glossy Lacquer Teal
/Smoked Oak

M986001XNA

Glossy Lacquer Praline
/Smoked Oak

M986002XNA

# Technical Features

The Amama sideboard combines a rounded and organic base with a container of rigorous shapes, creating a unique visual effect that attracts attention and enhances any environment.

**Versatility and Functionality**
The living sideboard is designed to perfectly adapt to any home environment. Thanks to the doors and spaces containing shelves, it allows for optimal organization of everyday objects, meeting the needs of those seeking practicality without sacrificing style.

**Elegance and Modernity**
The open compartment with lacquered shelves gives the sideboard a touch of elegance and modernity.

**Robustness and Durability**
Made of MDF with an oak veneer container. Top and base in glossy lacquer. Silent and Comfortable Use: The soft-closing doors ensure a quiet and comfortable user experience.

**Made in Italy**
Completely designed and manufactured in Italy, the sideboard is synonymous with high quality and craftsmanship, reflecting the excellence of Italian design.

# Dining Chair Ambra

The Ambra chair is a masterpiece of design and comfort, a constant invitation to sit and relax. Its visual softness and exceptional comfort make it an irresistible element for any environment.

**Superior Comfort**
Padded seat with elastic belts that ensure unparalleled comfort and excellent perceived softness. The elastic belts offer uniform and flexible support, perfectly adapting to the body's shape and improving ergonomics.

**Durability**
The straps are made from high-quality materials that maintain their elasticity over time.

**Strong Structure**
Made of metal tubing, the structure is cold-foamed with high-quality polyurethane foam and fully covered in leather.

**Resistant Feet**
Metal feet equipped with non-slip rubber under the legs for increased stability and safety.

**Italian Craftsmanship Made in Italy**
The Ambra chair is entirely made in Italy, synonymous with artisanal excellence and attention to details. Each piece is unique and reflects the tradition and innovation of Italian design.

**Versatile Beauty**
The Ambra chair is available in two versions: an armchair with armrests for extra comfort and a more compact version without armrests, ideal for smaller spaces. Available in leather (cat. 15 Lemans and Cat. 30 Stromboli and Cat. 35 Salina all colors from the sample collection).

**231** - without armrests

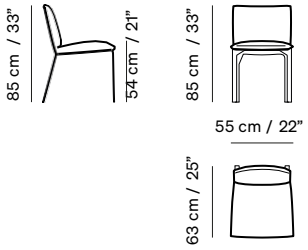


**003** - with armrests

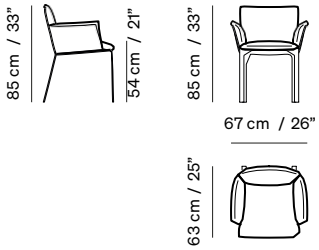

# Layout Examples

Our collection of tables is designed to fit any dining area thanks to a variety of configurations that optimize space and enhance the overall experience. Available in various sizes, it offers the flexibility needed to meet different needs.

## DIM: 10 SQM / 107 SQ FT

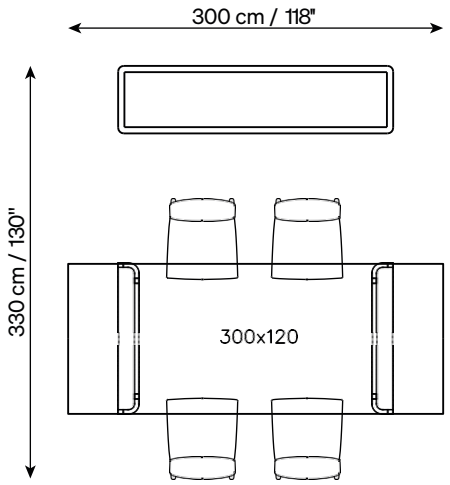


## DIM: 7,6 SQM / 82 SQ FT

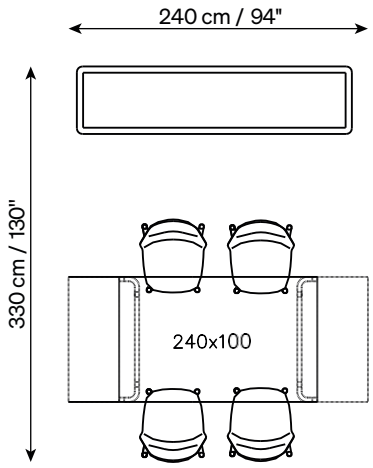


## DIM: 6,6 SQM / 71SQ FT

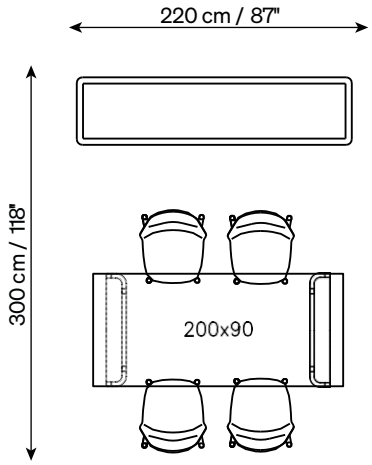

# Moodboard green

To achieve harmony in every project, the Natuzzi Style Center carefully selects materials and coverings. In this case, glossy lacquer Teal and Smoked Oak has been paired with Salina Leather and Settecolli and Marechiaro fabrics that defines the overall final look of the project. Each model in the collection is presented with multiple moodboards to suit all market geographies.

# Moodboard green

Every element is carefully chosen to create a coherent and refined environment, where every detail contributes to a unique aesthetic and functional experience.

Dining Table: Amama
Glossy Lacquer Teal L300 cm H76 cm
Q986001XNA

Sideboard: Amama
Glossy Lacquer Teal / Smoked Oak L220 P 55 H 74 cm
M986001XNA

Dining Chair: Ambra
Fully Upholstered with Arms
CH010033000

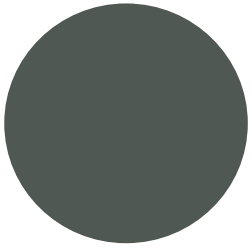

STROMBOLI 30I5

These products have been carefully selected to maintain the atmosphere and harmony of the design. Although the products may be available in different sizes to fit various spaces, the combination of colors, materials, and finishes remains fixed and cannot be modified.

NATUZZI
ITALIA